BROAN®

MODEL 349BR

ROOF-MOUNT POWERED ATTIC VENTILATOR

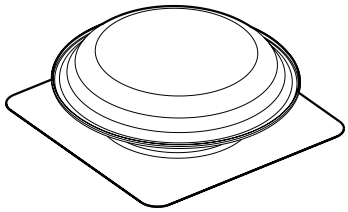

READ AND SAVE THESE INSTRUCTIONS

WARNING

TO REDUCE THE RISK OF FIRE, ELECTRIC SHOCK, OR INJURY TO PERSONS, OBSERVE THE FOLLOWING:

1. Use this unit only in the manner intended by the manufacturer. If you have questions, contact the manufacturer at the address or telephone number listed in the warranty.
2. Before servicing or cleaning unit, switch power off at service panel and lock the service disconnecting means to prevent power from being switched on accidentally. When the service disconnecting means cannot be locked, securely fasten a prominent warning device, such as a tag, to the service panel.
3. Installation work and electrical wiring must be done by a qualified person(s) in accordance with all applicable codes and standards, including fire-rated construction codes and standards.
4. Sufficient air is needed for proper combustion and exhausting of gases through the flue (chimney) of fuel burning equipment to prevent backdrafting. Follow the heating equipment manufacturer's guidelines and safety standards such as those published by the National Fire Protection Association (NFPA), and the American Society for Heating, Refrigeration and Air Conditioning Engineers (ASHRAE), and the local code authorities.
5. When cutting or drilling into wall or ceiling, do not damage electrical wiring and other hidden utilities.
6. The wiring must be permanent. DO NOT USE AN EXTENSION CORD! Use 14 GA. MINIMUM copper wire. Although the Powered Attic Ventilator may be wired directly to power, we advise that some type of shut off switch be installed in the line. Please see the section on electrical wiring for suggested wiring diagrams and instructions.
7. This unit must be grounded.

CAUTION

1. For general ventilating use only. Do not use to exhaust hazardous or explosive materials and vapors.
2. To avoid motor bearing damage and noisy and/or unbalanced impellers, keep drywall spray, construction dust, etc. off power unit.
3. This unit has an unguarded impeller. Do not use in locations readily accessible to people or animals.
4. Fan is equipped with a thermostat which may start fan automatically. To reduce risk of injury or electric shock while servicing or cleaning unit, switch power off at service panel and lock service panel to prevent power from being switched on accidentally. When the service disconnecting means cannot be locked, securely fasten a prominent warning device, such as a tag, to the service panel.
5. Home Ventilating Institute (HVI) recommends one square foot of open air inlet per 300 cfm of fan capacity. The best location for these air intake vents are under the eaves with direct access to the attic. Failure to provide these intakes could cause natural-draft gas appliances to backdraft.
6. Your attic fan installation will create a screened opening into your attic space. During a heavy rain storm there could be a light spray of rain into this attic space. This is a normal condition with all attic ventilators and will not cause any damage to the structure. We recommend that you do not store any valuable articles directly under the fan opening in the roof. During extreme rain and wind storms you may want to turn on your attic ventilator to prevent excess moisture accumulation in your attic.
7. Records show, under ideal conditions, exposed galvanized steel can remain rust free up to 100 years. For best protection, the exposed portion of the roof sheet should be painted, especially in areas of unusually high industrial air pollution. Follow paint manufacturer's instructions for good adhesion.
8. This ventilator is intended for roof installation. The Broan Model 353 Gable Mount Ventilator is available for side wall applications.
9. The dome may be painted with a high-quality paint. Follow the paint manufacturer's recommendations for powder-coated steel.
10. Please read specification label on product for further information and requirements.

TOOLS AND MATERIALS REQUIRED

- ❑ Slotted Screwdriver
- ❑ Drill
- ❑ 1/4" Drill Bit
- ❑ Sabre Saw or Keyhole Saw
- ❑ Hammer
- ❑ Ruler
- ❑ Pencil
- ❑ Utility Knife
- ❑ Pry Bar (to remover roofing nails)
- ❑ Roofing Cement
- ❑ Galvanized Roofing Nails (1¾" min.)
- ❑ Electrical Supplies (to comply with codes)

INSTALLATION

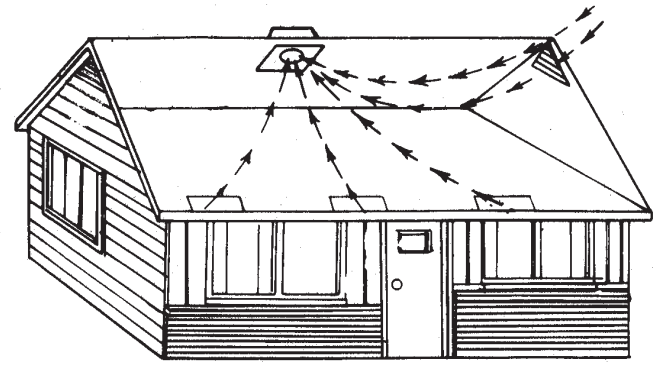

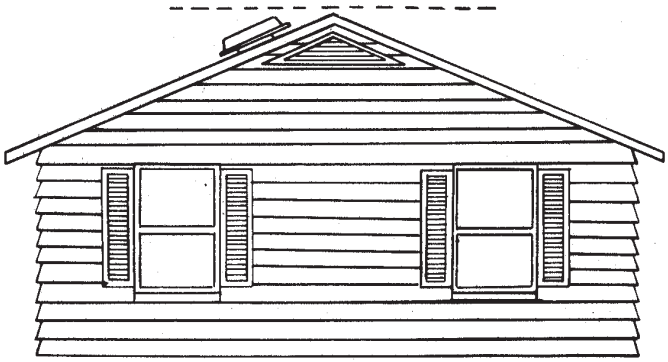

1. Locate the ventilator at the center of the rear slope of the roof. Place it as high on the roof as possible. The location should be free of obstacles (T.V. leads, electrical lines, etc.) If the ventilator top is level with the roof peak, it can't be seen from the street. Keep this approximate location in mind as you work from within the attic.

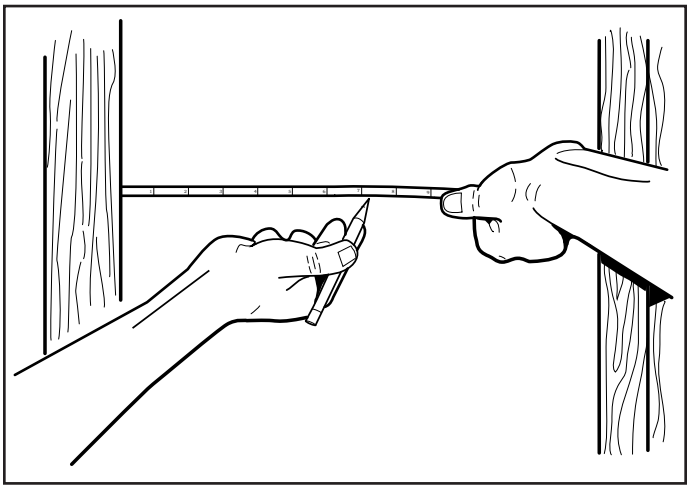

2. Mark a spot halfway between rafters.

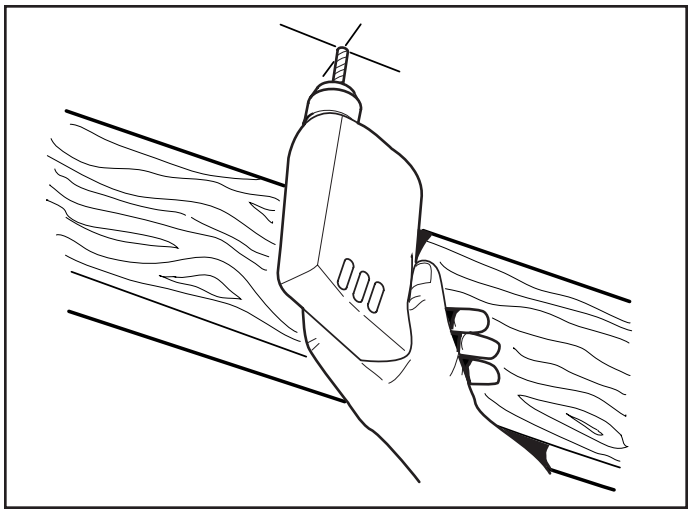

3. Drill a guide hole through the roof at this mark.

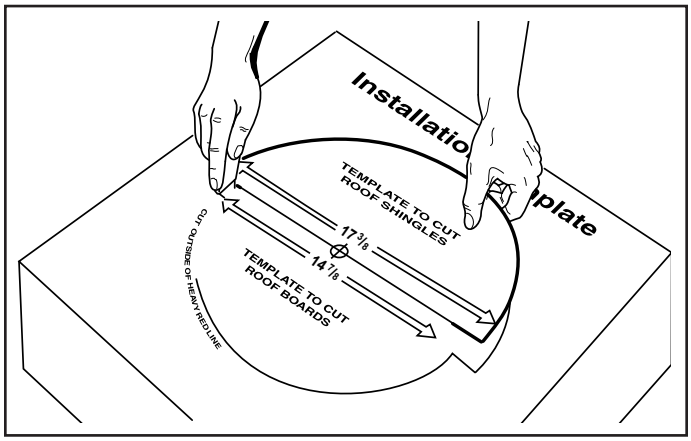

4. Cut out the template found on the carton.

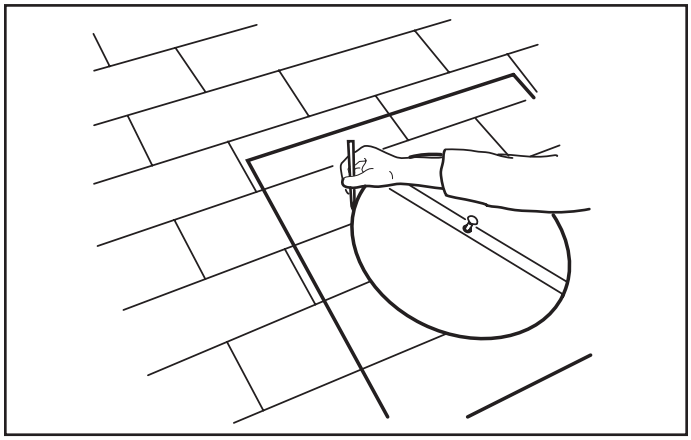

5. Push a large nail through the center of the cardboard template and into the guide hole.

   Using the large half of the template, draw a 17 3/8" diameter circle on the shingles.

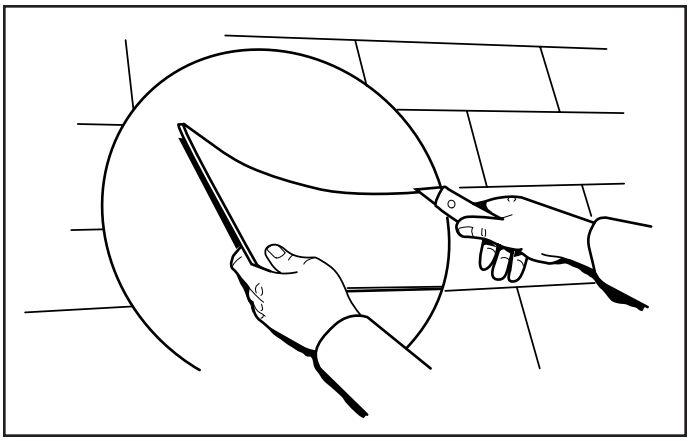

6. Cut out the shingles inside of the circle.

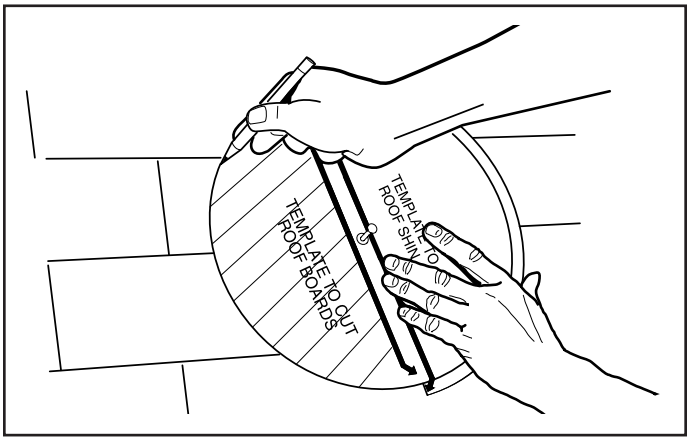

7. Replace template over guide hole and draw a 14 7/8"diameter circle on the black paper or roof boards using the smaller half of the template.

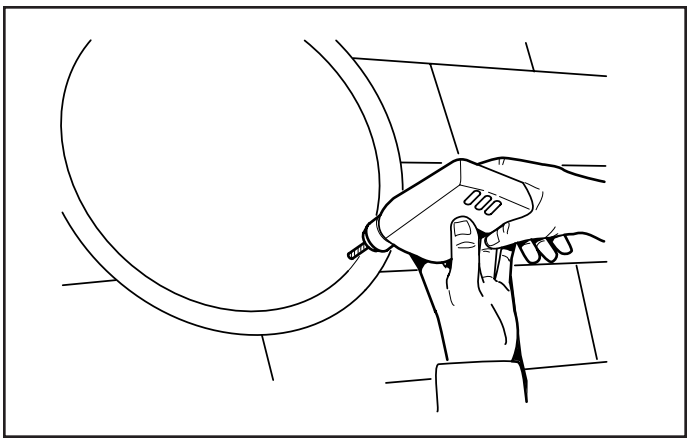

8. Drill a large starting hole for the sabre saw just inside of the line.

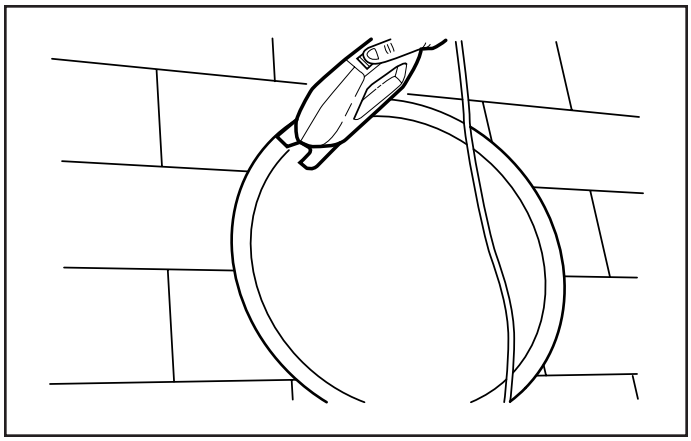

9. Cut out the roof board(s) inside of the line. **Do not cut rafters.**

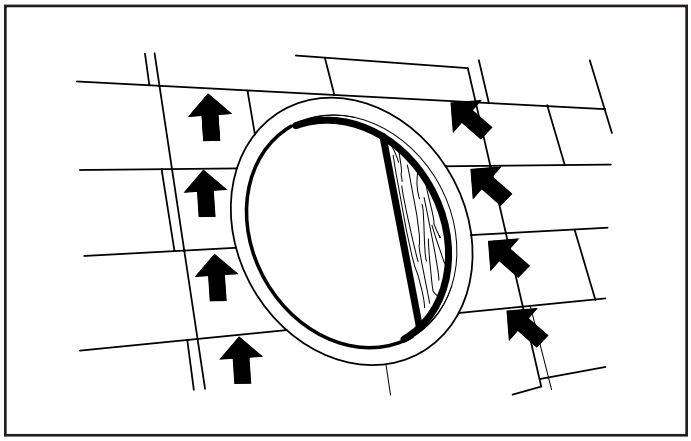

10. For proper removal of roofing nails, draw a 25 3/8" square, centered around the hole. Remove nails holding shingles down from top two-thirds of square.

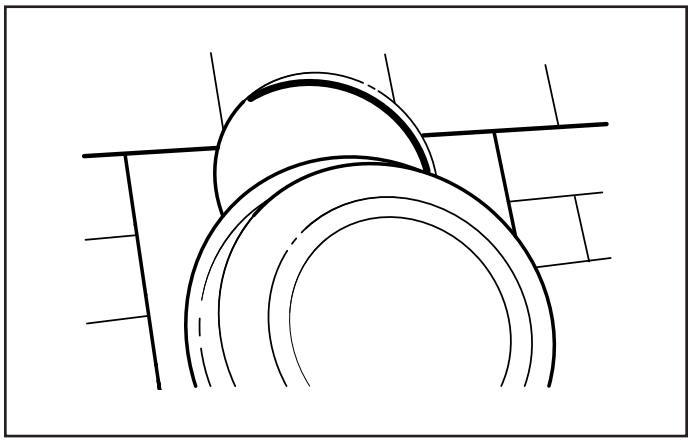

11. Slide the flashing under the shingles. Start two-thirds of the way down from the top of the 25 3/8" square. Do not bend the shingles any more than necessary. Center the ventilator over the hole.

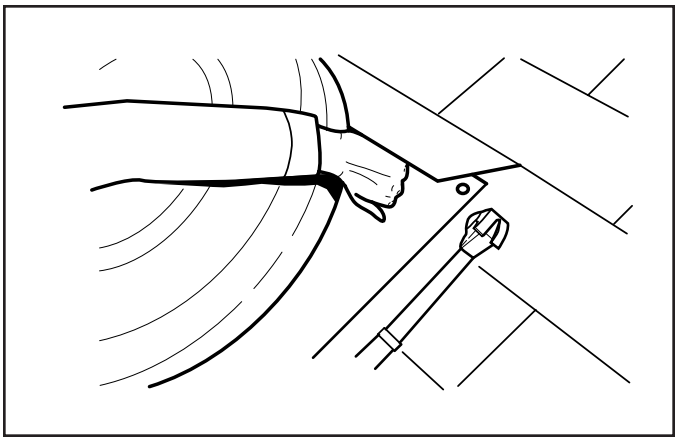

12. Carefully lift shingles and nail flashing securely to the roof using galvanized roofing nails.

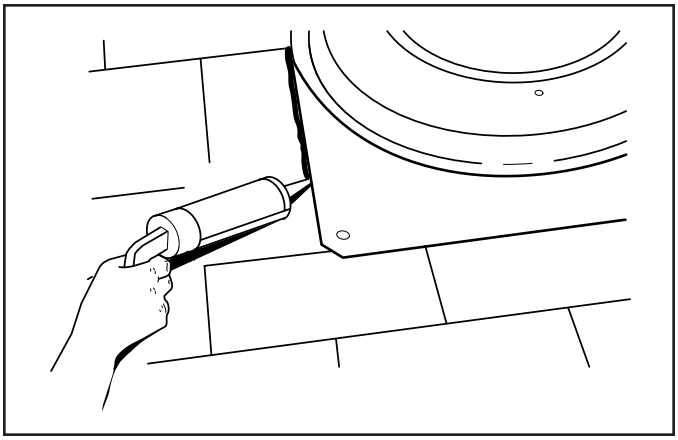

13. Using a good grade of roofing cement material, seal all of the shingles and heads of nails.

    DO NOT seal the bottom edge of the flashing.

WIRING

IMPORTANT: Do not mount outlet box near heat source.

1. Mount the outlet box to a nearby rafter so that the outlet box is higher than the fan motor.

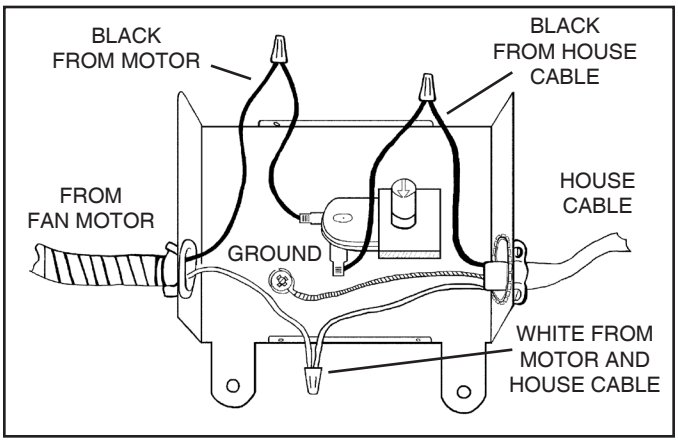

CAUTION: Make sure fan and switches are properly grounded and all wiring complies with local electrical code requirements.

2. Remove the thermostat wiring box cover plate. Bring 120 VAC, 14-gauge-with-ground house power cable at least 6" into the thermostat wiring box. Fasten cable to box with apporpriate connector.
3. An on/off switch can be installed in a convenient location in the living area of the house so that the fan can be turned off when not needed.

ADJUSTING THE THERMOSTAT

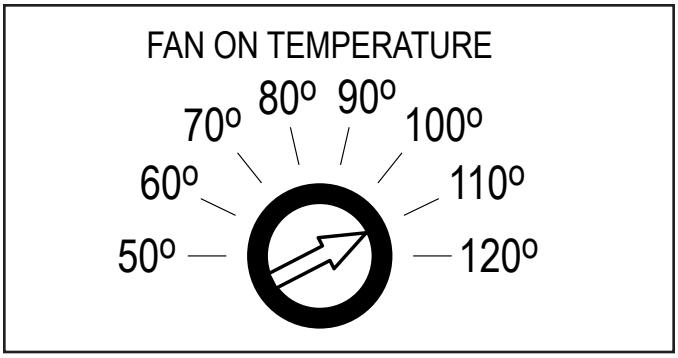

The fan thermostat is preset to 110ºF. The fan will automatically start when the ambient temperature reaches the set temperature and stop when the temperature drops 10-degrees below the set temperature. The start temperature can be adjusted from 60ºF to 120ºF.

SERVICE PARTS

KEY NO.	PART NO.	DESCRIPTION
1	0705B-000	Cover
2	0706B-000	Motor
3	0707B-000	Blade
4	0708B-000	Conduit
5	0709B-000	Motor Mounting Bracket (3 req.)
6	0710B-000	Bird Screen
7	0711B-000	Outlet Box Thermostat Assembly

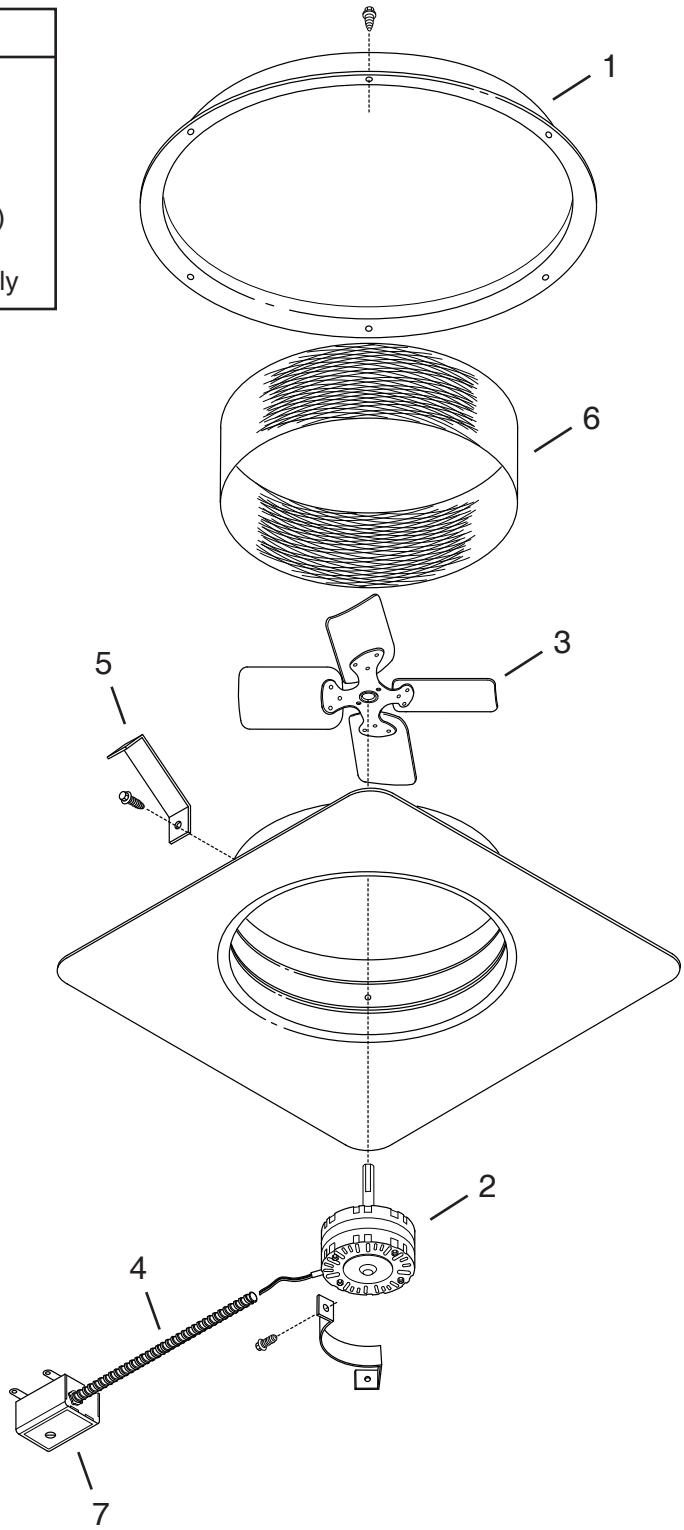

WARRANTY

One Year Limited Warranty

WARRANTY OWNER: Broan-NuTone warrants to the original consumer purchaser of its products that such products will be free from defects in materials or workmanship for a period of one (1) year from the date of original purchase. **THERE ARE NO OTHER WARRANTIES, EXPRESS OR IMPLIED, INCLUDING, BUT NOT LIMITED TO, IMPLIED WARRANTIES OF MERCHANTABILITY OR FITNESS FOR A PARTICULAR PURPOSE.**

During this one year period, Broan-NuTone will, at its option, repair or replace, without charge, any product or part which is found to be defective under normal use and service. THIS WARRANTY DOES NOT EXTEND TO FLUORESCENT LAMP STARTERS OR TUBES, FILTERS, DUCT, ROOF CAPS, WALL CAPS AND OTHER ACCESSORIES FOR DUCTING. This warranty does not cover (a) normal maintenance and service or (b) any products or parts which have been subject to misuse, negligence, accident, improper maintenance or repair (other than by Broan-NuTone), faulty installation or installation contrary to recommended installation instructions.

The duration of any implied warranty is limited to the one year period as specified for the express warranty. Some states do not allow limitation on how long an implied warranty lasts, so the above limitation may not apply to you.

BROAN-NUTONE'S OBLIGATION TO REPAIR OR REPLACE, AT BROAN-NUTONE'S OPTION, SHALL BE THE PURCHASER'S SOLE AND EXCLUSIVE REMEDY UNDER THIS WARRANTY. BROAN-NUTONE SHALL NOT BE LIABLE FOR INCIDENTAL, CONSEQUENTIAL OR SPECIAL DAMAGES ARISING OUT OF OR IN CONNECTION WITH PRODUCT USE OR PERFORMANCE. Some states do not allow the exclusion or limitation of incidental or consequential damages, so the above limitation or exclusion may not apply to you. This warranty gives you specific legal rights, and you may also have other rights, which vary from state to state. This warranty supersedes all prior warranties.

WARRANTY SERVICE: To qualify for warranty service, you must (a) notify Broan-NuTone at the address or telephone number below, (b) give the model number and part identification and (c) describe the nature of any defect in the product or part. At the time of requesting warranty service, you must present evidence of the original purchase date.

Broan-NuTone LLC Hartford, Wisconsin www.broan.com 800-558-1711
Broan-NuTone Canada Mississauga, Ontario www.broan.ca 877-896-1119